EXPLODED DRAWING A—Model No. WBEL99608.0

R1008A

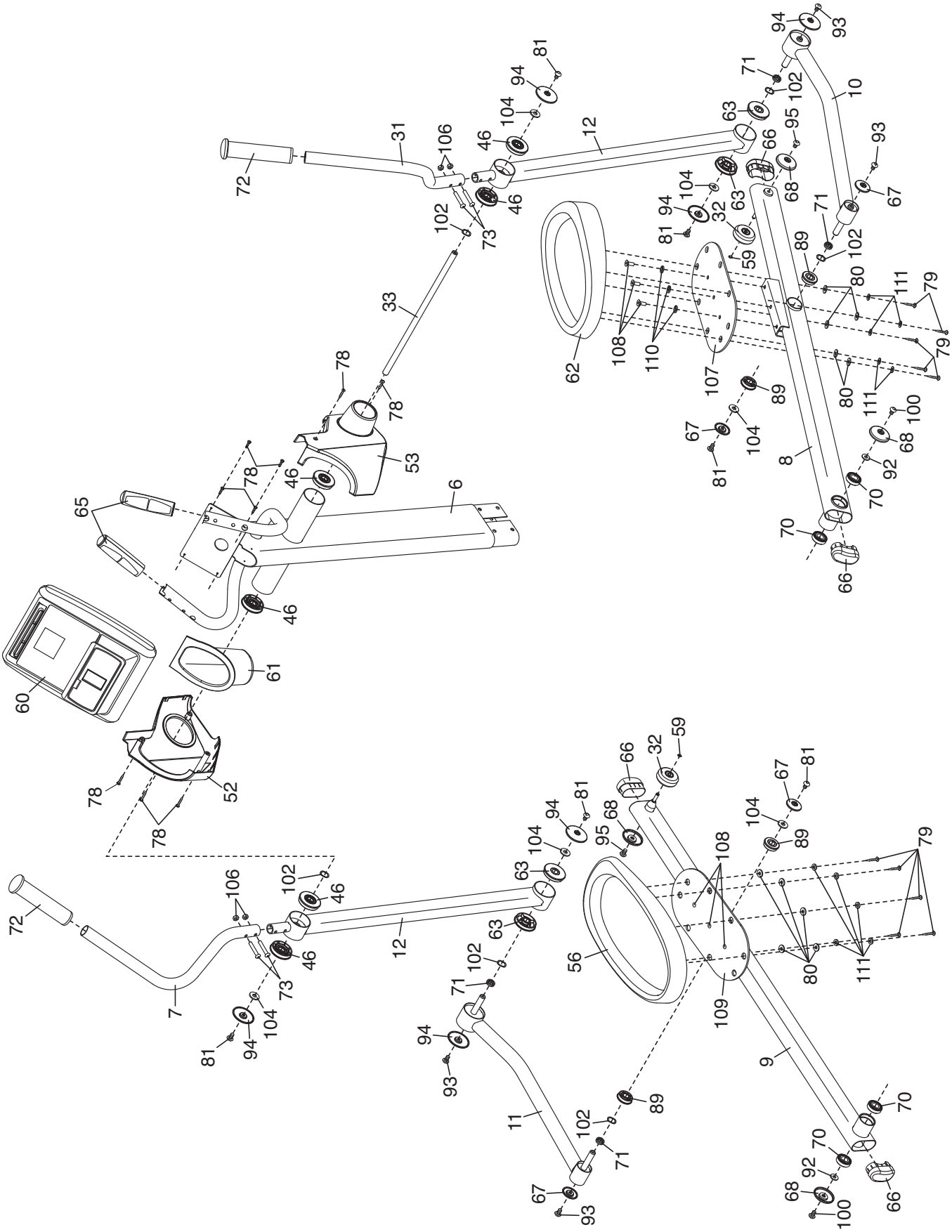

EXPLODED DRAWING B—Model No. WBEL99608.0
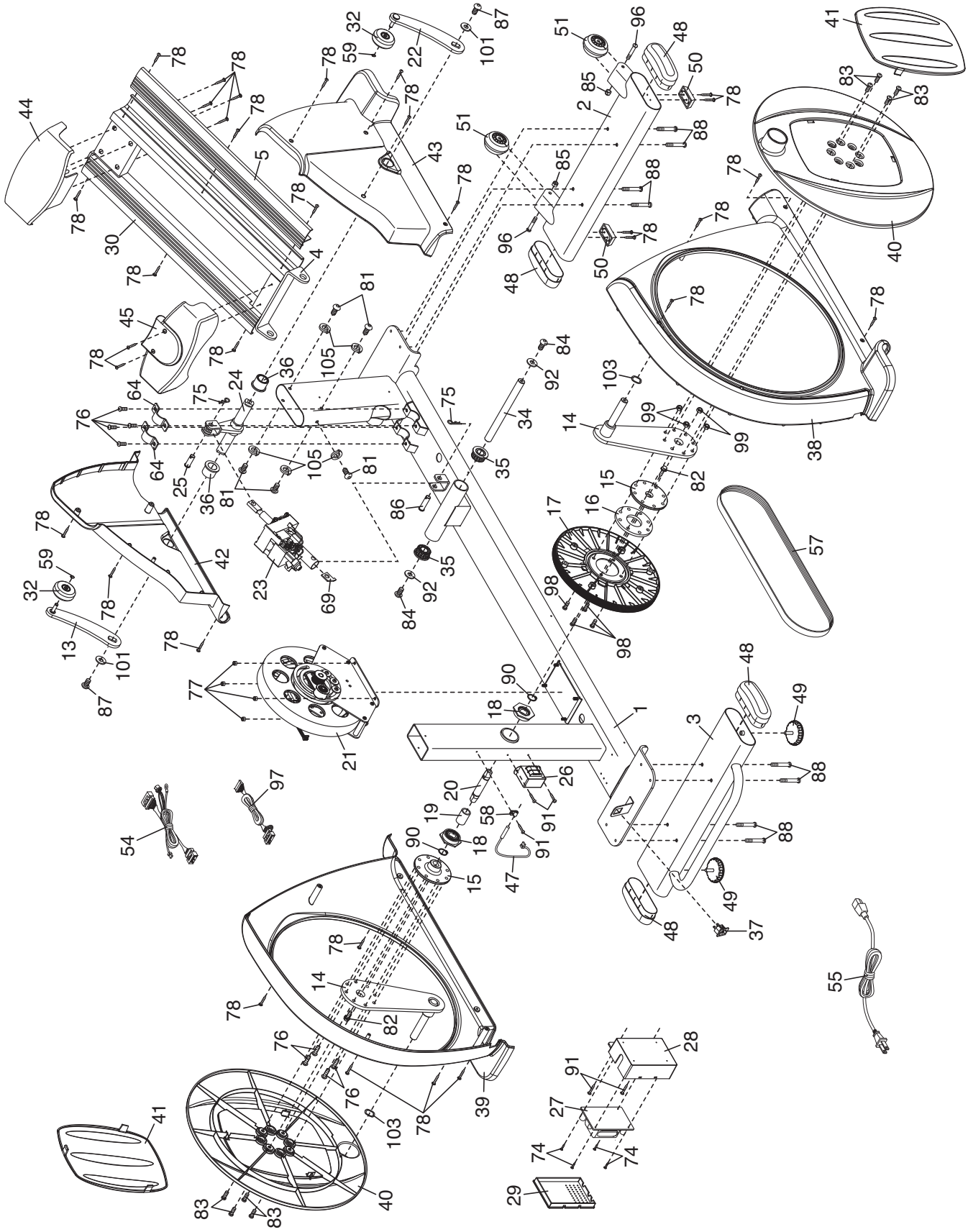
R1008A