EXPLODED DRAWING
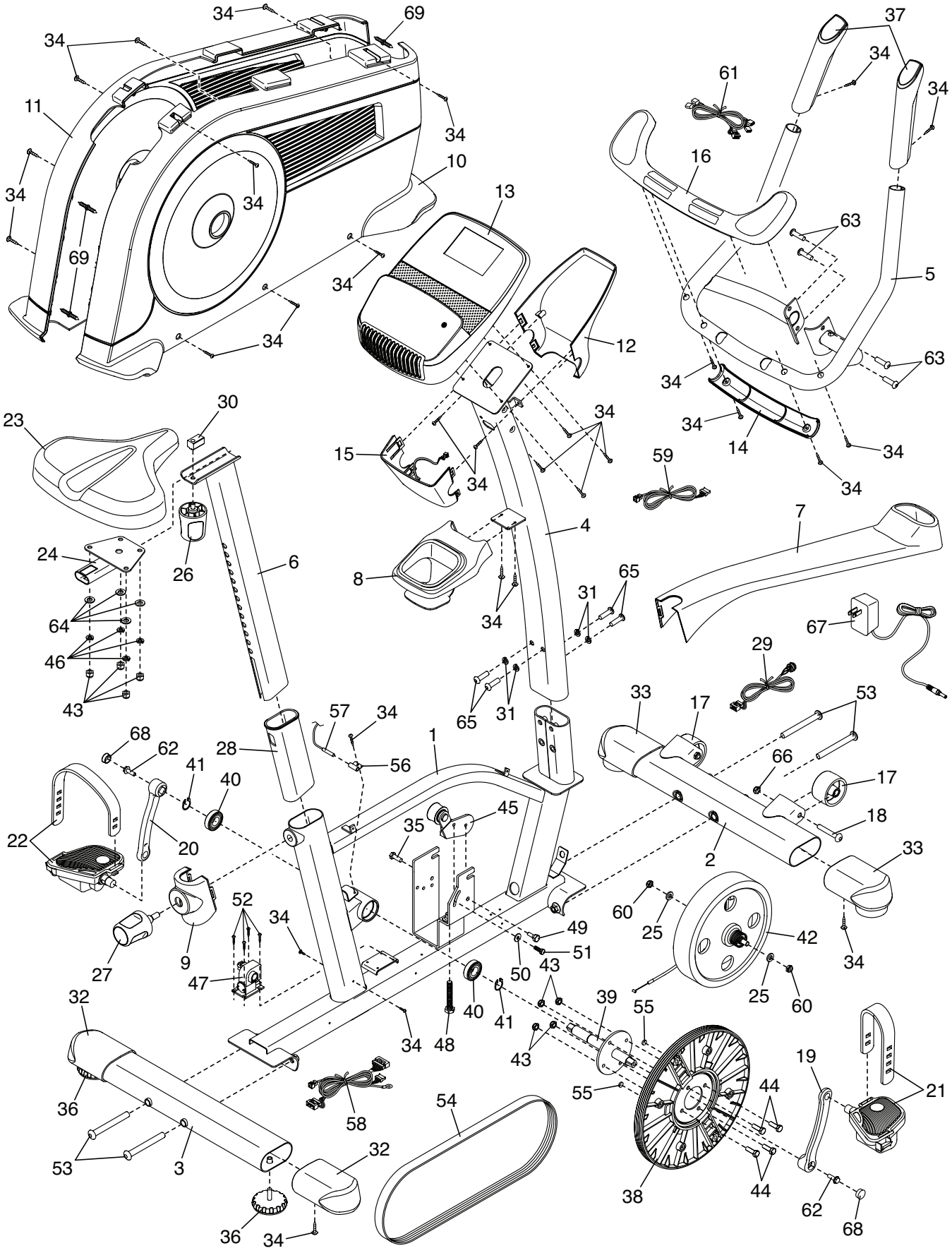
Model No. SFEX04012.4 R0913A