PART LIST—Model No. RBEL59907.1

R1007B

Key No.	Qty.	Description
1	1	Frame
2	1	Rear Stabilizer
3	1	Upright
4	1	Console
5	1	Shield Cover
6	1	Upright Cover
7	1	Ramp Cover
8	2	Wheel
9	5	Foot
10	1	Eddy Mechanism
11	2	Pedal Leg Tube
12	1	Idler
13	1	Pulley
14	1	Crank
15	6	Crank Bearing
16	1	Resistance Motor
17	1	Rear Stabilizer Cover
18	2	Magnet
19	10	Pivot Bushing
20	1	Clamp
21	1	Reed Switch/Wire
22	1	Left Handlebar
23	1	Left Upper Body Arm
24	1	Left Pedal Leg
25	2	Link Arm
26	2	Pedal
27	4	Roller
28	4	Weld Spacer
29	2	Roller Axle
30	2	Link Tube
31	2	Crank Arm
32	2	Key
33	1	Left Side Shield
34	2	Upper Body Endcap
35	1	Rear Handle Cover
36	1	Right Handlebar
37	1	Right Upper Body Arm
38	1	Right Pedal Leg
39	1	Right Pedal Bracket
40	1	Right Side Shield
41	1	Pivot Axle
42	1	Crank Arm Spacer
43	1	Belt
44	2	Control Grip
45	2	Link Arm Endcap
46	1	Wire Harness
47	1	Power Harness
48	1	Left Pedal Bracket
49	1	Front Stabilizer
50	2	Stabilizer Endcap
51	1	Transformer
52	1	Control Board
53	1	Control Box
54	1	Control Box Cover
55	1	Ramp
56	1	Lift Bracket
57	1	Lift Motor
58	1	Tube Brace
59	1	Lift Axle
60	1	Pivot Pin
61	1	Hairpin
62	2	Roller Spacer
63	1	Ramp Axle
64	2	Pulse Grip/Wire
65	2	Cover Plate
66	1	Front Ramp Cover
67	1	Rear Ramp Cover
68	1	Power Receptacle
69	5	Custom Clip
70	4	Hood Clip
71	2	M6 x 9mm Patch Screw
72	2	M8 x 50mm Hex Screw
73	2	Large Snap Ring
74	4	#8 x 2" Screw
75	2	M6 x 14mm Flat Head Screw
76	2	Barrel Nut
77	2	M10 x 15mm Patch Screw
78	2	M10 x 120mm Patch Screw
79	1	M10 x 50mm Button Screw
80	5	M8 Hex Nylon Locknut
81	20	M6 x 12mm Patch Screw
82	2	M8 x 50mm Patch Screw
83	2	M8 x 16mm x 2mm Washer
84	4	M10 x 58mm Bolt

Key No.	Qty.	Description	Key No.	Qty.	Description
85	4	M8 x 19mm Patch Screw	100	2	M10 x 22mm x 1.5mm Washer
86	16	#8 x .75" Screw	101	6	M10 x 20mm Patch Screw
87	1	Lift Motor Wire	102	2	M10 x 89mm Hex Screw
88	1	Power Cord	103	7	M10 Hex Nylon Locknut
89	4	M8 x 55mm Patch Screw	104	2	#8 x .313" Screw
90	4	M4 x 16mm Screw	105	2	M8 Hex Nylon Locknut Cls10.9
91	4	M4 x 10mm Screw	106	1	M8 x 78mm Patch Screw
92	12	#8 x .50" Screw	107	2	Pedal Insert
93	2	Small Snap Ring	108	6	M6 x 18mm Patch Screw
94	3	M4 x 16mm T Screw	109	4	M6 Nylon Locknut
95	1	#8 x 1.75" Screw	110	2	Ground Wire
96	2	M8 Nylon Locknut	*	–	Hex Key
97	5	#8 x .50" Cupped Screw	*	–	Grease Packet
98	6	M10 x 29mm x 2mm Washer	*	–	User’s Manual
99	4	Pedal Leg Bushing			

Note: Specifications are subject to change without notice. See the back cover of this manual for information about ordering replacement parts. *These parts are not illustrated.

EXPLODED DRAWING A—Model No. RBEL59907.1

R1007B

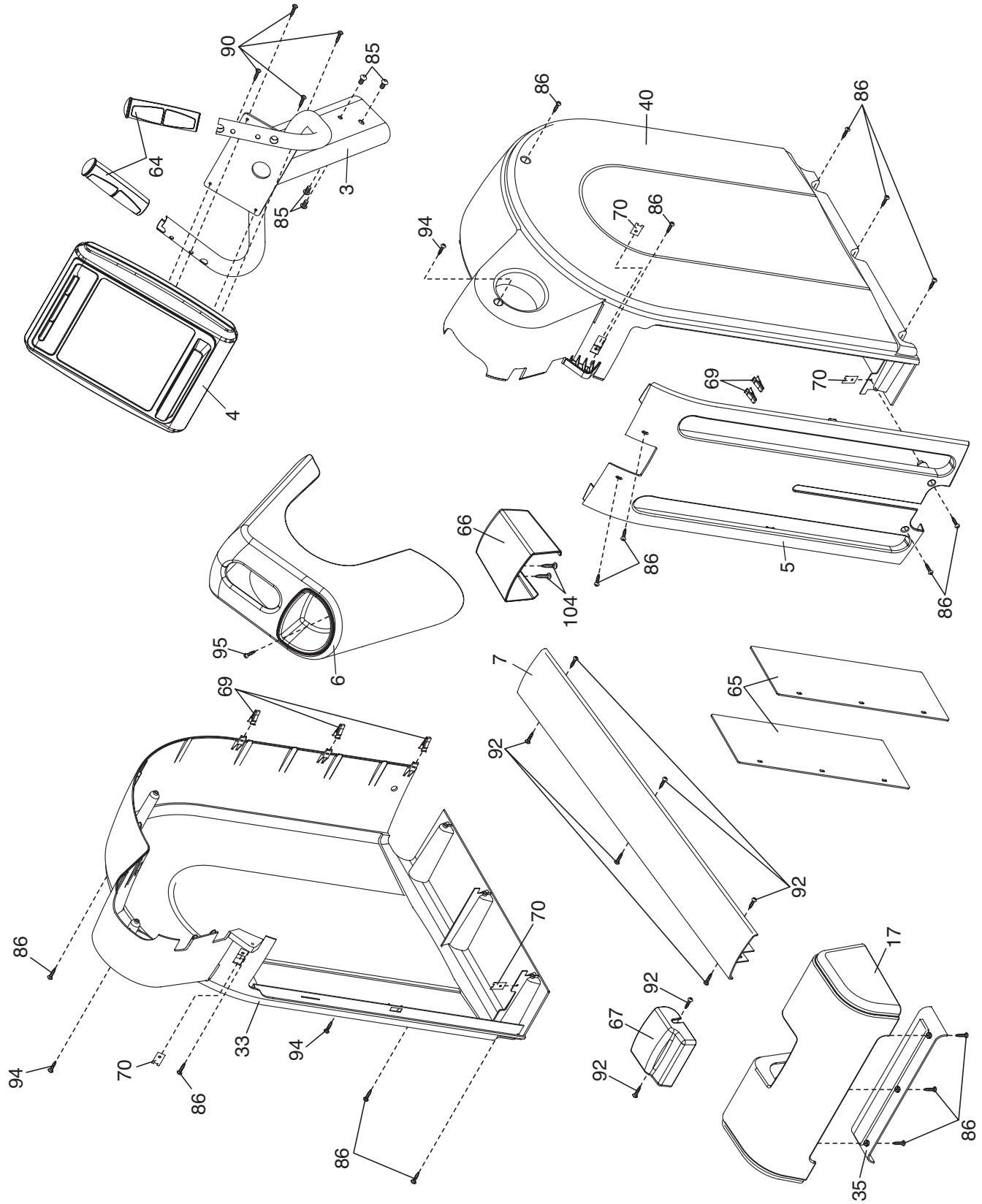

EXPLODED DRAWING B—Model No. RBEL59907.1
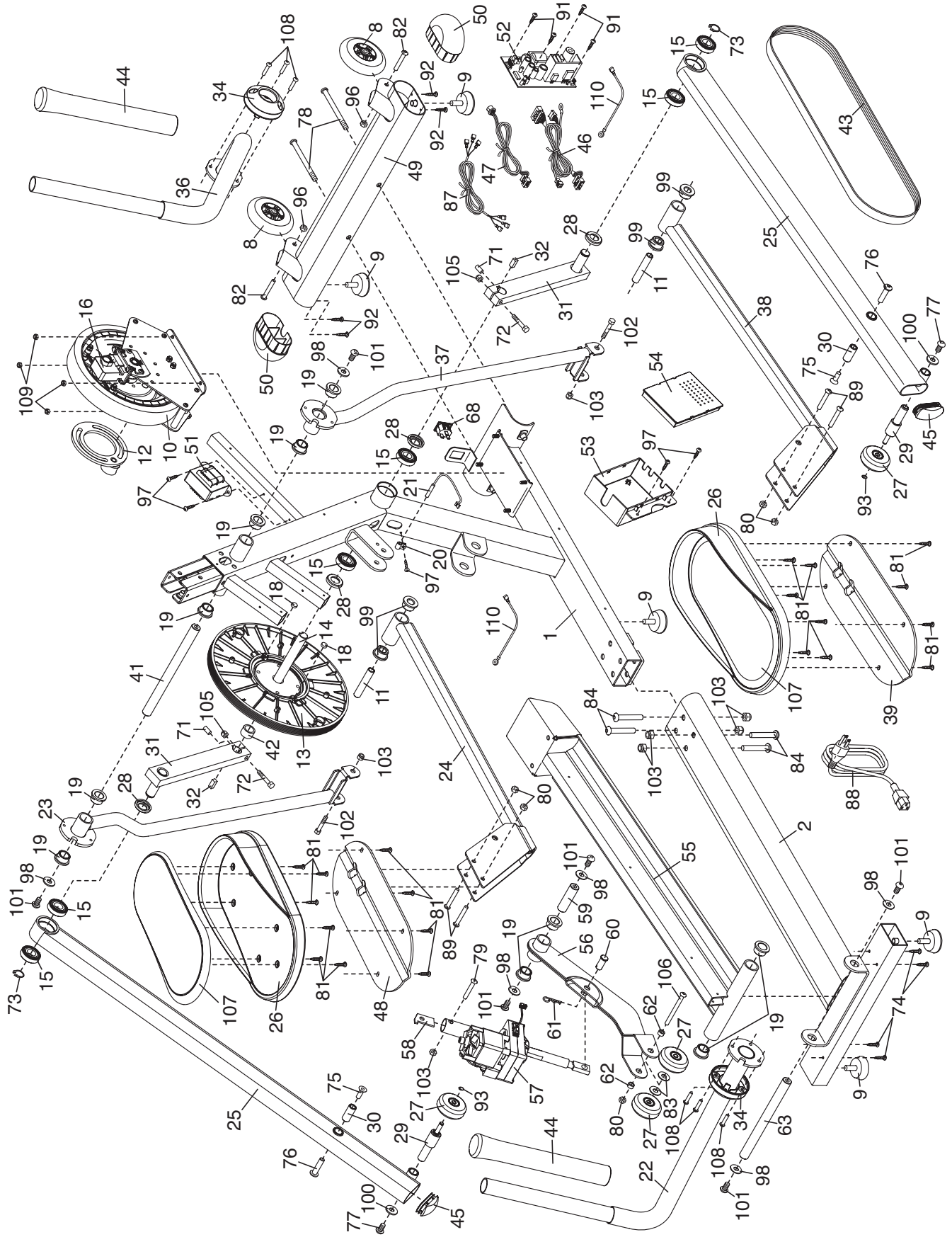
R1007B